Low sloping solar panel system - south-facing short side

	Part	Part. no.
1	OPTI sealing plate	TP3645
2	C-profile solar mount	CP1400
3	Solar cell rail	IS2450
4	Support plate	SP3328
5	Low mount 10°	LL1005
6	Centre mount 10°	LL1010
7	Self-tapping screw 6.3x19 mm 10/100/1000-pack	SS6191/SS6190/SS1000

	Part	Part. no.
8	Rubber washer Ø50mm M10	GB5010
9	Template, low sloping system	LL0020
10	Railing tube	RR2723
11	Spacer washers 50-pack	MB5050
12	End clamps	KL3050
13	Centre clamp	KL2250
14	Set of screws 100 pcs, self-tapping 6,3x38 mm sst	SS6380

Observe the Swedish Work Environment Authority's rules! All work at heights above 2 metres must be carried out using fall protection. Weland Stål can help you create a safe workplace.

Fit the sealing plates on the roof in accordance with separate installation instruction MA5008.
NB Take care when setting out and fitting!

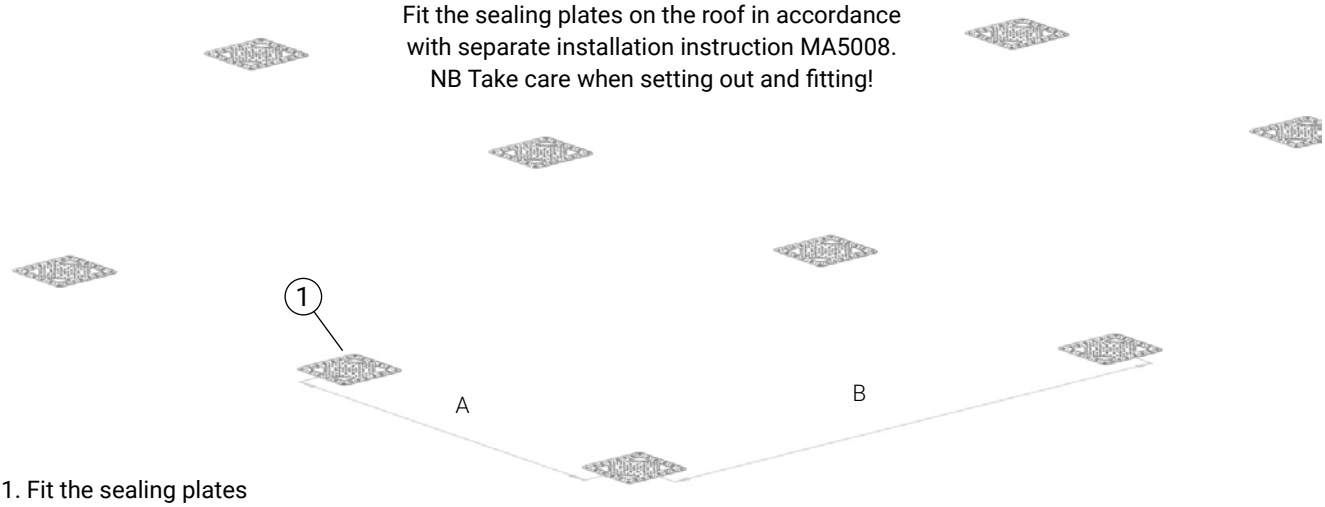

1. Fit the sealing plates

Measure and position the sealing plates (1) for mechanical attachment.
C/C dimension A = length of panel + 20 mm.
C/C dimension B = stated in snow and wind load report.
For setting out and installation instructions, see snow/wind load report.

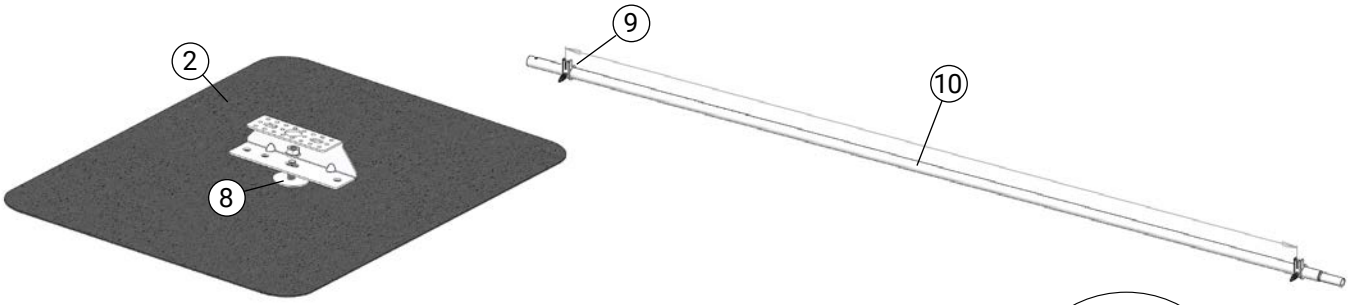

2. Fit C profiles (2)

Adjust the templates (9) + (10) for correct c/c dimension between the C profiles (2). C/c dimension A = length of panel + 20 mm. Fit the first C profile (2) in the centre of the oval hole. Don't forget to place the rubber washer (8) under the mount! Tighten the nut with a torque of 20 Nm so that the rubber washer is compressed. Fit the next C profile (2) and measure out the correct c/c dimension laterally. The nut should then be tightened again to ensure that the roof material is compressed. C/C dimension B is stated in the snow and wind load report.

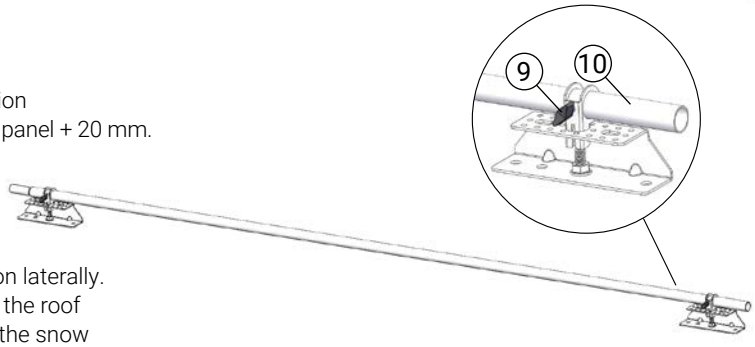

If the roof is uneven, the rows with the mounts (5)(6) may need to be lined up using a marking cord between the first and last mount. Spacer washers (11) with screw (14) may also be used (max 25 mm) to bring the rail to the right level.

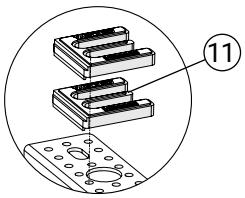

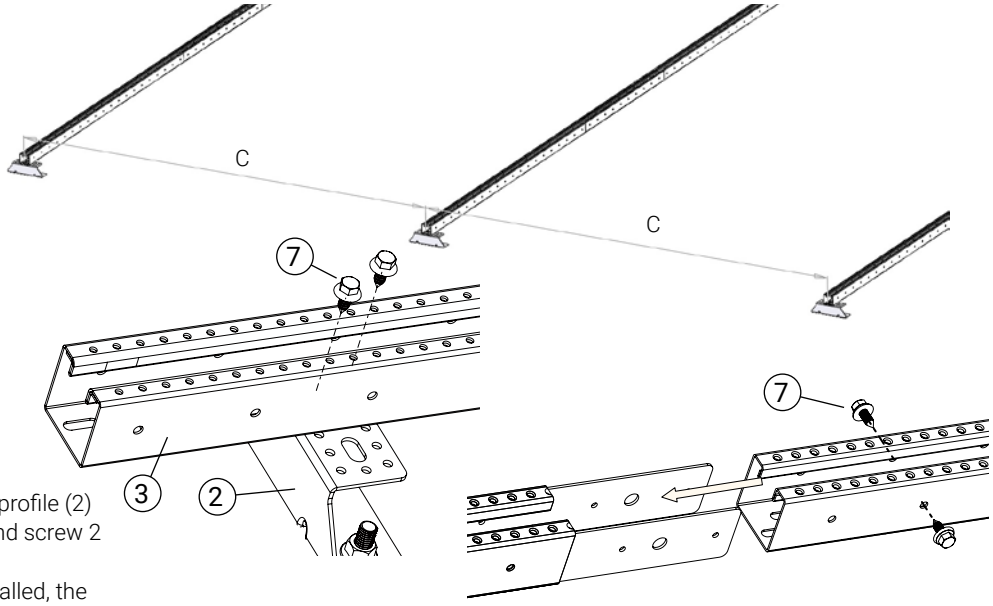

3. Fit attachment rails

Fit the rail (3) in the middle of the C profile (2) using 2 screws (7). Slide together and screw 2 screws (7) at the joint.
If the C profiles (2) are correctly installed, the attachment rails (3) will now have the correct c/c dimension (C).

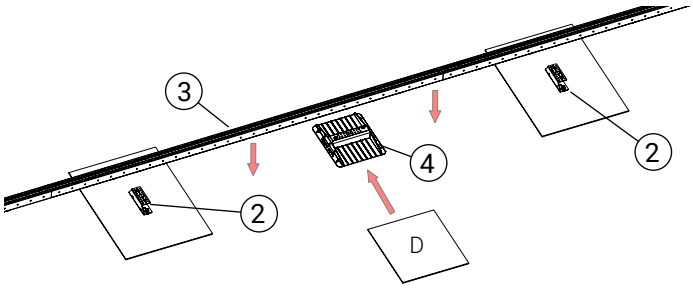

4. Fit support plates

Place support plates (4) with protective pad (D) at least as large as the support plate. Install the support plate in the rail (3) with the **click-function** between the fixed c-profiles (2). The number of support plates is specified in the snow and wind load report.

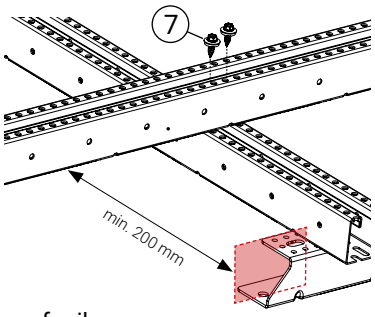

5. Crossing of rails

When crossing rails, the upper rail is mounted to the lower one with 2 screws (7). If the stabilizer rail is to be mounted near the first or last row, the minimum distance from the mounting point is 200 mm.

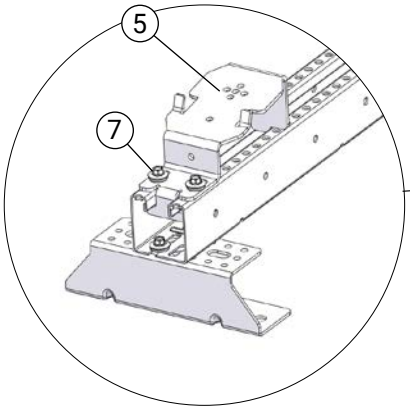

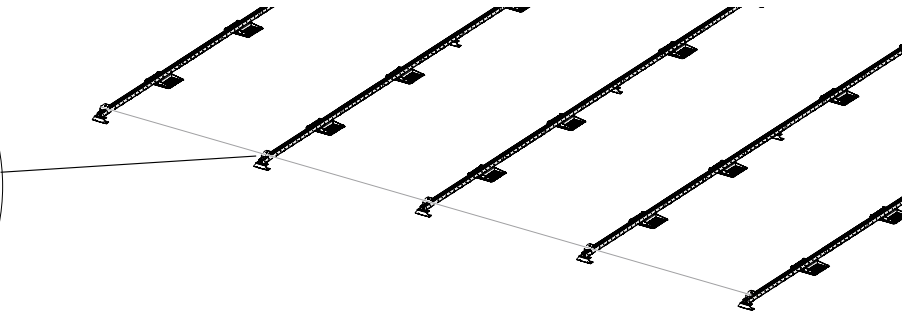

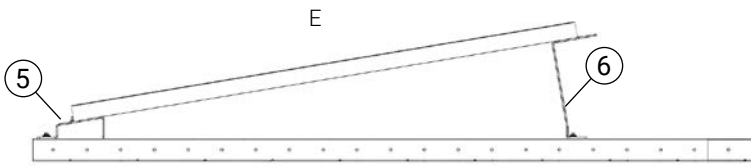

6. Fit the mounts

Fit the first row with low mounts (5) using 2 screws (7) attached to the rail. Measure the high mount (6) and fit at the correct distance to the low mount (5), which is determined by the width of the panel (E).

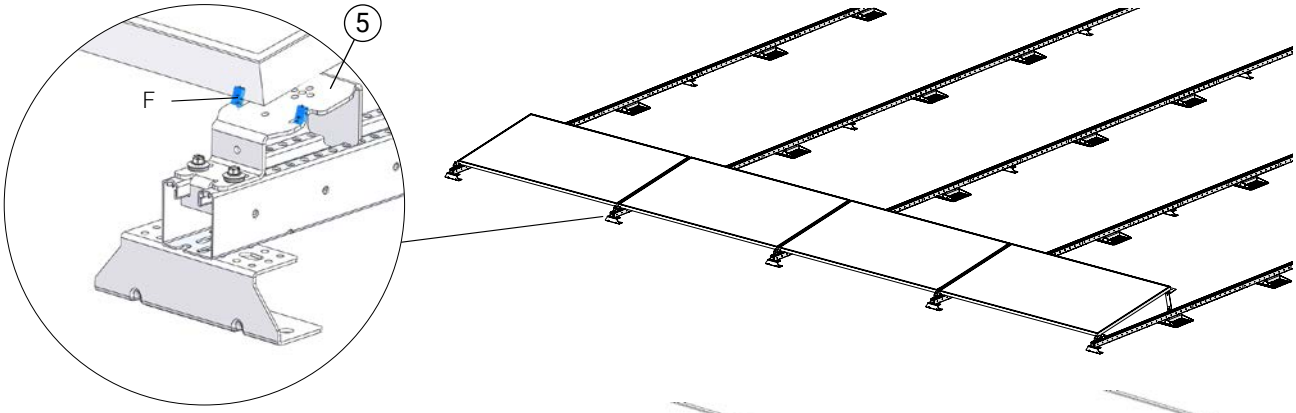

7. Install the first row of panels to check that everything fits as it should.

Lay the first row of panels. The panels should rest against the heels (F) on the low mount (5). Install end clamps (12) in the outer edges and centre clamps (13) between the panels with self-tapping screws (14). Tightening torque 10 Nm. *NB – do not use a nut tap on sheet metal screws.*

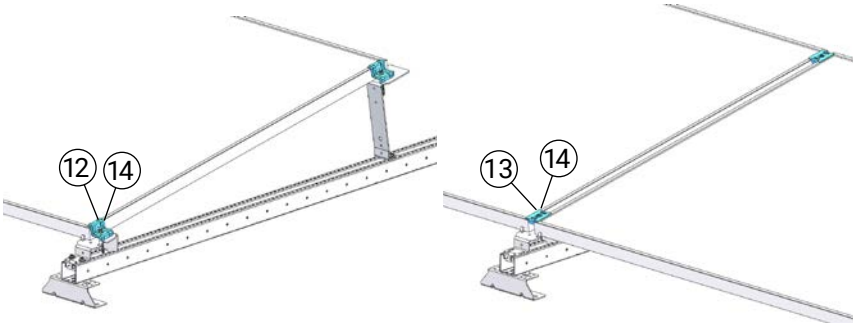

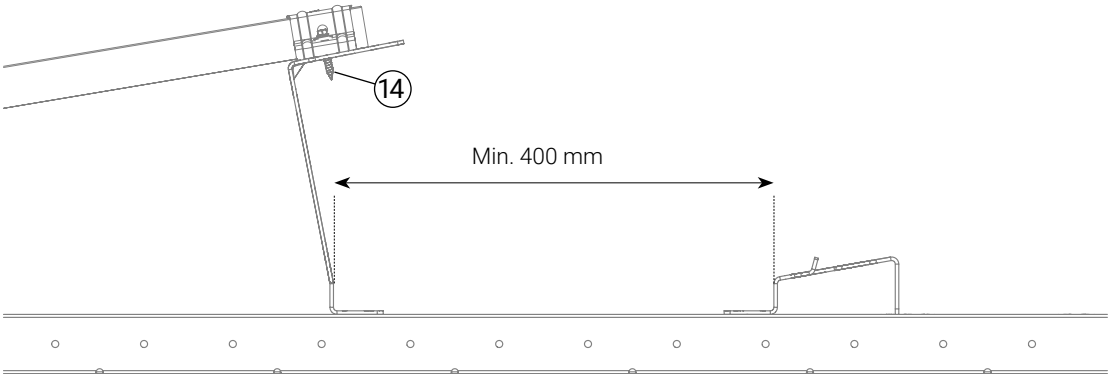

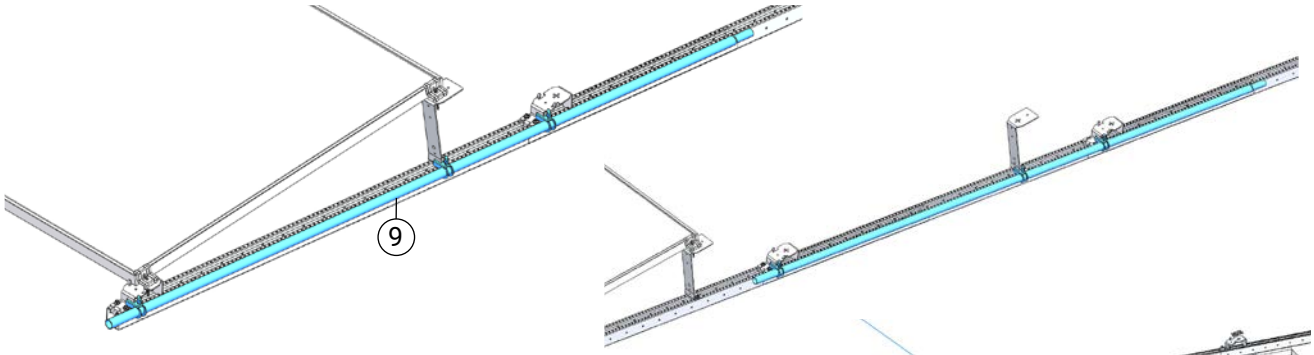

8. Fit remaining mounts

Measure out where the second row of low mounts (5) should begin. The recommended distance is at least 400 mm. Fit the template (9) against the existing mounts. The template is used to position the mounts without having to measure.

Note that any small errors in the installation will be magnified as more rows are installed using the template. It may be a good idea to start a new perpendicular row after installing several rows.

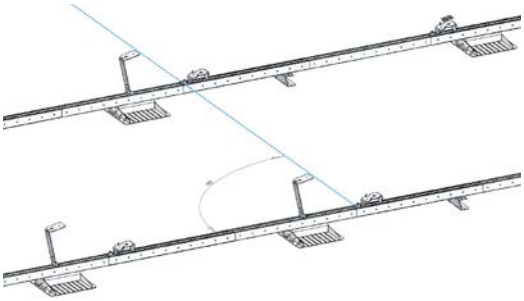

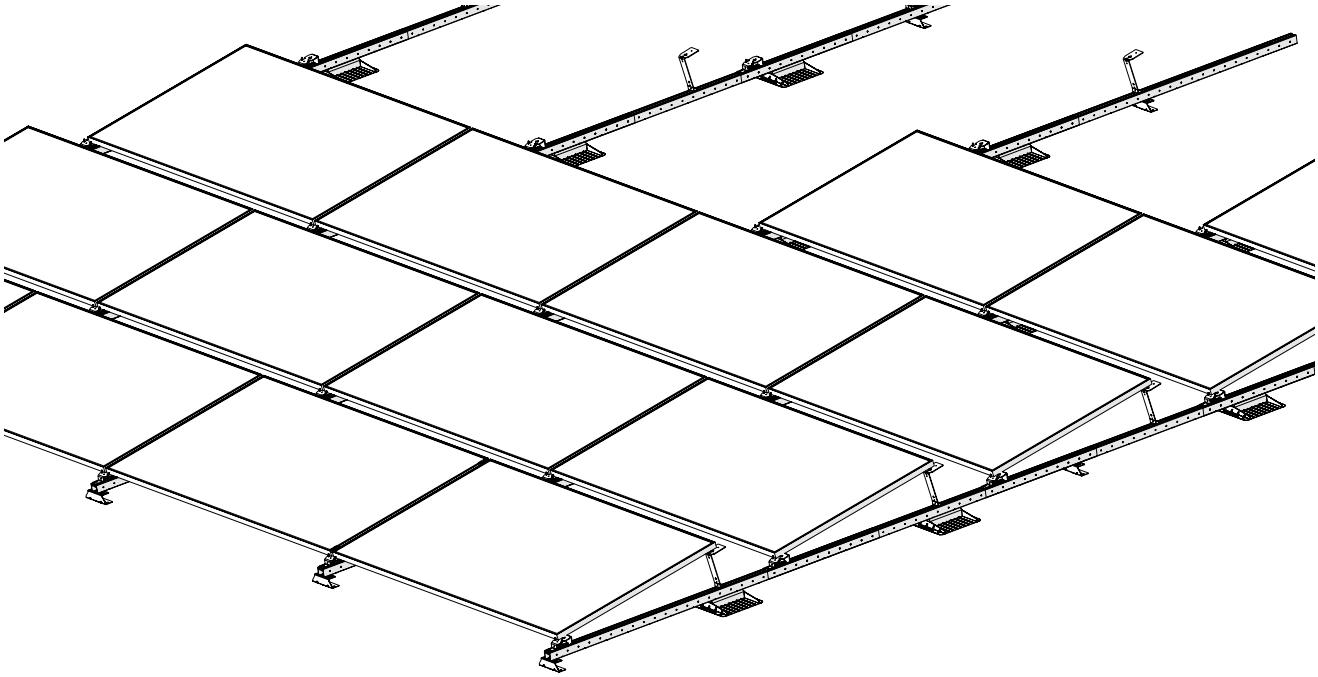

9. Install remaining panels

Install the remaining panels in the same way as described in step 7.

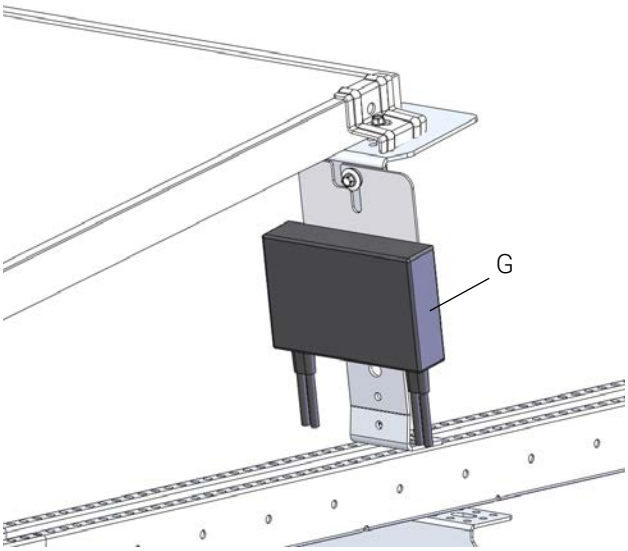

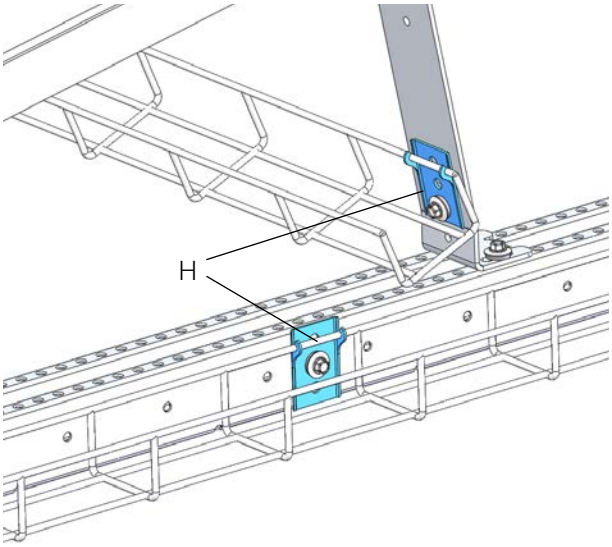

10. Accessories

Optimiser (G) can be fitted direct to the mount.

Holders for wire ladders and cable ducts (H) can be fitted direct to mounts and rail.